RicVac®

PROFESSIONAL CLIPPER VACUUM SYSTEM

Made in the USA

RicVac® is easy to install to on Oster 10 hair and Oster 76 model clippers with only two screws. Additional accessories are also easy to install to your work space with provided screws or GM two-side tape.

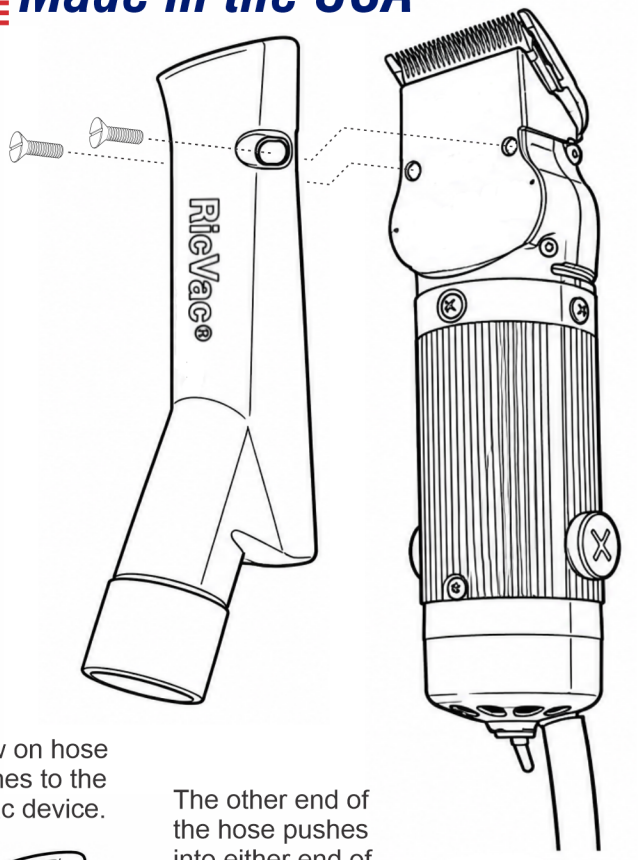

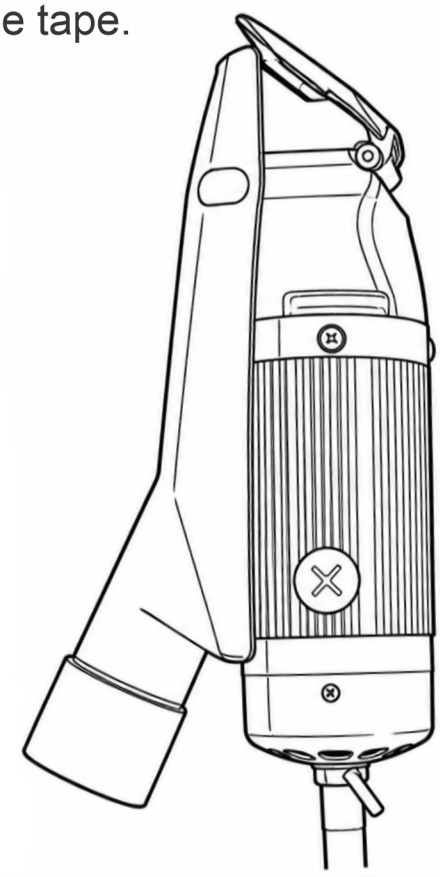

Screw on hose attaches to the RicVac device.

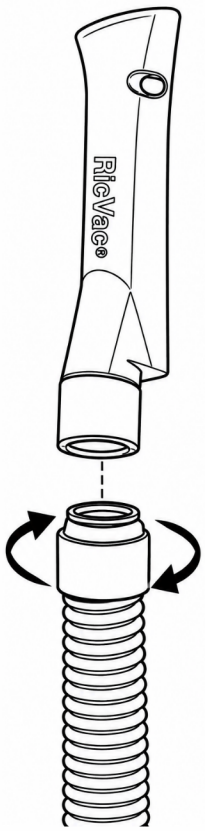

The other end of the hose pushes into either end of the bigger hose.

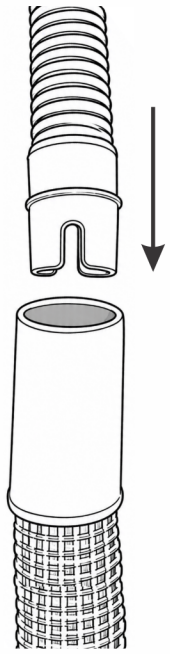

The remaining end of the large hose pushes into your in-house vacuum.

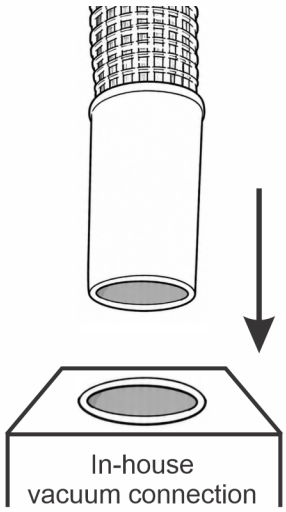

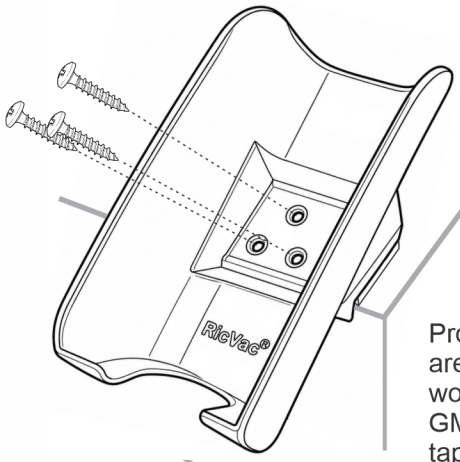

RicVac cradle mounts to counter top edge by GM two-sided tape or 3 phillips head screws (provided).

Provided mounting screw are standard phillips head wood screws (5 total) and GM two-sided adhesive tape.

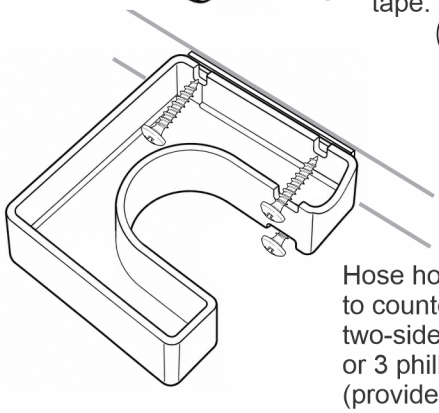

Hose holder mounts to counter side by GM two-sided adhesive tape or 3 phillips head screws (provided).

RicVac® is a Registered Trademark